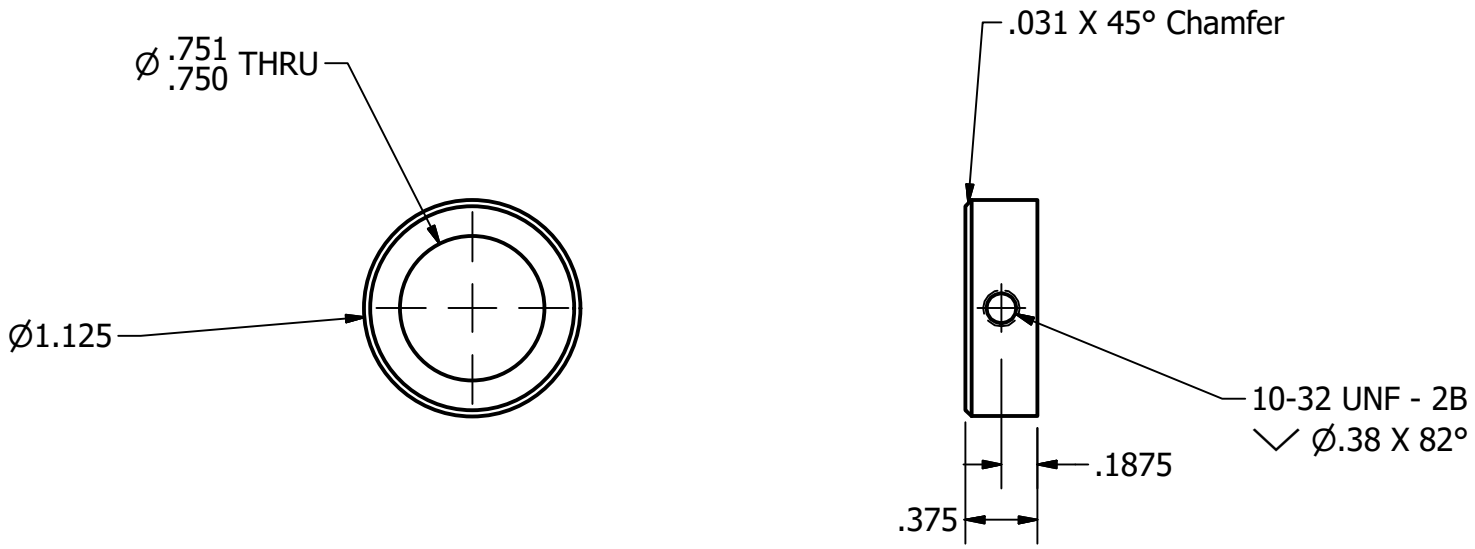

NOTE:
TOL: X.XX ± 0.001
X.XXX ± 0.001
X.XXXX ± 0.0001

DRAWN KAI MANGIARACINA	8/21/2018	
CHECKED		TITLE COLLAR
QA		
MFG		
APPROVED		SIZE A / DWG NO 1254-7 / REV
MATL: STL		SCALE 1 : 1 / UNITS: CI / SHEET 1 OF 1